CPRO
DIGITAL SURVEILLANCE SYSTEMS

5M IP MFZ IR Bullet

NBT5-45-RZ

Features

- 5MP camera
- Maximum resolution 2592 (horizontal) X 1944 (vertical) / 30fps
- Horizontal angle of view 40.8 degrees (wide angle) to 6.9 degrees (zoom) / Optical 8x
- Day & Night (ICR) / IR reach distance 37 meters
- Backlight compensation (WDR)
- SD/SDHC/SDXC memory slot
- PoE IEEE 802.3af/Class3
- IP67/IK09



Dimension (mm)

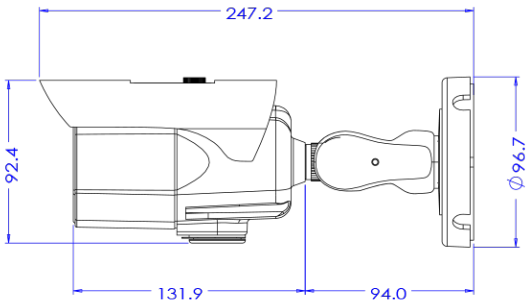

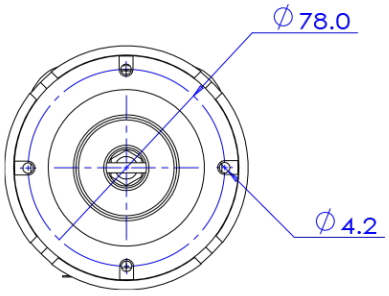

CPRO
DIGITAL SURVEILLANCE SYSTEMS

Specification

Video	
Image Sensor	1/2.8” 5.69M CMOS
Channels	1
Total Pixel	2704(H) X 2104(V)
Max Resolution	2592(H) X 1944(V)
MIN. Illumination	0.08Lux 0Lux with IR (F1.6)
Only installer Video Output	1 [CVBS 1.0V p-p (75Ω)]
S/N(signal/noise) Ratio	50dB
Scanning Mode	Progressive Scan

Lens	
Focal Length	6~50mm
Aperture	F1.6
Lens Type	Motorized_Varifocal
IRIS Type	P-IRIS
Horizontal Angle	D:8.6°~52°, H:6.9°~40.8°, V:5.2°~30.2°
Pan / Tilt / Zoom	Zoom :X8 Optical

Operational	
Shutter Speed	Auto / Manual (1/15 ~ 1/32000) Anti-Flicker Slow Shutter(1/2,1/3,1/5,1/6,1/7.5, 1/10)
Auto Gain Control (AGC)	Auto
Day & Night	TDN (True Day & Night)
Digital Noise Reduction	3D DNR
Wide Dynamic Range (WDR)	WDR(2x)
Dynamic Range	120dB or above
LEDs	H6IR
LED Distance	120ft(37m)
Privacy Zone	Yes
Function	Motion-Detection Mirror&Flip

Intelligent Video Analytic	
AI Intelligent Video Analytic	No

CPRO
DIGITAL SURVEILLANCE SYSTEMS

Encoder (video & audio)	
Video Compression	H.264 H.265 MJPEG
Support Resolution	H.265 : 2592x1944/2560x1440/2304x1296/1920x1080/1280x720/704x480/640x480/352x288/352x240 H.264 : 2592x1944/2560x1440/2304x1296/1920x1080/1280x720/704x480/640x480/352x288/352x240 MJPEG : 1920x1080/1280x720/800x600/768x432/704x576/704x480/640x480/352x288/352x240
Intelligent Codec	Yes
Multiple Profile Streaming Performance	Triple Streaming(3rd Only MJPEG)
Video BitRate	100Kbps~10Mbps
Bitrate Control	Multi Streaming CBR/VBR at H.264,H.265 (Controllable frame rate and Bandwidth)
Video Bitrate extra comment	Multi-rate for Preview and Recording
Audio Compression	G.711 ulaw
Special Feature	Dynamic ROI(Region of Interest) Smart LBR

I/O & Event	
Audio In / Out	1 Line Input[1.0Vrms, 3K ohm]/1 Line Output
Alarm In / Out	1 Line/1 Line
Mic	No
Event Trigger	Motion Alarm Network Disconnection Temperature Critical Illegal Login Schedule Sensor Detection
Event Notification	FTP E-Mail Alarm Out SD Card

Network	
Ethernet	RJ45 (10/100Base-T)
Protocol	TCP/IP UDP AutoIP RTP(UDP/TCP) RTSP NTP HTTP HTTPS SSL DNS DDNS DHCP FTP SMTP ICMP SNMPv1/v2/v3(MIB-2) ONVIF
Security	HTTPS(SSL) IP filtering 802.1x Digest Authentication
Application Programming I/F	CGI API ONVIF
Web viewer	MS Edge® Google Chrome®
Video management software (VMS)	Yes
Support languages	English Korean Japanese Vietnamese
Edge storage	Micro SD Micro SDHC Micro SDXC
SD Card Socket	1

Electrical	
Power Requirement	Adaptor is not included DC12V PoE IEEE 802.3af Class3
Power consumption	DC Max: 9W(12VDC 0.75A) PoE Max: 10.5W(48VDC 0.22A)

CPRO
DIGITAL SURVEILLANCE SYSTEMS

Environmental	
Operating Temperature	-20℃ ~ 50℃
Cold Start	-40℃
Operating Humidity	10-90% RH(Non-Condensing)
Vandal Proof Casing	IK09
IP Rating	IP67
Other Certification	FCC CE ROHS KC

Mechanical	
Housing Model	BT5
Housing	Outdoor Bullet
Material	Aluminum-Die Casting
Color	White
Dimensions (W x D x H)	247.2mm 96.7mm
Weight	0.9kg

Compatible Accessories



BJC13
JUNCTION BRACKET



BJC11
JUNCTION BRACKET

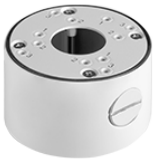

BJC07
Junction Bracket



BJC01
Junction Bracket



BP01
Pole Mount Bracket



BCO01
Corner Mount Bracket