**CPRO**
**DIGITAL SURVEILLANCE SYSTEMS**

# AI 4K IP MFZ IR Bullet

NBT8-78-R

## Features

- 4K AI Camera
- Supports Intelligent Video Analytics Events (Line Crossing, Intrusion Detection, Queue Monitoring, etc.)
- Max. Resolution 3840 × 2160 @ 30fps
- Horizontal FOV 90° (Wide) ~ 33° (Tele) / 5x Optical Zoom
- Day & Night (ICR)
- IR Range up to 34 m
- WDR
- SD/SDHC/SDXC Card Slot
- PoE IEEE 802.3af / Class 3
- IP67 / IK10
- Built-in Heater
- Built-in Microphone
- Built-in Junction Box



## Dimension (mm)

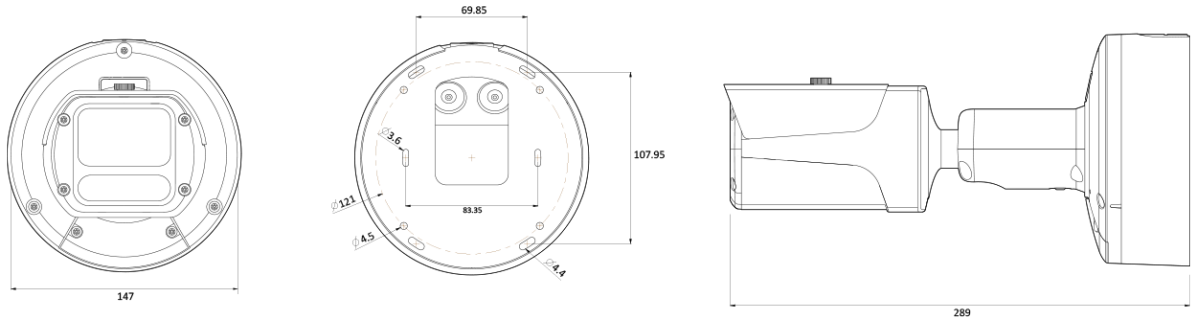

**CPRO**
**DIGITAL SURVEILLANCE SYSTEMS**

# Specification

| Video | |
|---|---|
| Image Sensor | 1/2.8” 8.6M CMOS |
| Channels | 1 |
| Total Pixel | 3864(H) X 2228(V) |
| Max Resolution | 3840(H) X 2160(V) |
| MIN. Illumination | COLOR: 0.09Lux<br>BW: 0Lux with IR |
| Only installer Video Output | 1 [CVBS 1.0V p-p (75Ω)] |
| S/N(signal/noise) Ratio | 50dB |
| Scanning Mode | Progressive Scan |

| Lens | |
|---|---|
| Focal Length | 2.7~13.5mm |
| Aperture | F1.4 |
| Lens Type | Motorized_Varifocal |
| IRIS Type | P-IRIS |
| Horizontal Angle | D:38.2°~105.0°, H:33.1°~90.3°, V:18.9°~49.0 |
| Pan / Tilt / Zoom | Zoom :X5 Optical |

| Operational | |
|---|---|
| Shutter Speed | Auto / Manual (1/15 ~ 1/32000) Anti-Flicker Slow Shutter(1/2,1/3,1/5,1/6,1/7.5, 1/10) |
| Auto Gain Control (AGC) | Auto |
| Day & Night | TDN (True Day & Night) |
| Digital Noise Reduction | 3D DNR |
| Wide Dynamic Range (WDR) | WDR(2x) |
| Dynamic Range | 120dB or above |
| LEDs | H4IR |
| LED Distance | 110ft(34m) |
| Privacy Zone | Yes |
| Function | Motion-Detection LDC Mirror&Flip Auto White Balance |

| Intelligent Video Analytic | |
|---|---|
| AI Intelligent Video Analytic | Yes |
| Video analytics | Intrusion Detection Zones&lines Tamper Detection Appear Filter Disappear Filter Dwell Filter Enter Filter Exit Filter Stopped Filter Counting Counting Lines Object Color Direction Filter Logical Rules Tailgating Filter DL People Tracker DL Object Tracker Metadata |

# CPRO
# DIGITAL SURVEILLANCE SYSTEMS

| Encoder (video & audio) | |
|---|---|
| Video Compression | H.264 H.265 MJPEG |
| Support Resolution | H.265 : 3840x2160/2592x1944/2560x1440/1920x1080/1280x720/800x600/704x576/704x480/640x480/640x360/352x288/352x240<br>H.264 : 3840x2160/2592x1944/2560x1440/1920x1080/1280x720/800x600/704x576/704x480/640x480/640x360/352x288/352x240<br>MJPEG : 1920x1080/1280x720/800x600/768x432/704x576/704x480/640x480/640x360/352x288/352x240 |
| Intelligent Codec | Yes |
| Multiple Profile Streaming Performance | Triple Streaming(3rd Only MJPEG) |
| Video BitRate | 100Kbps~25Mbps |
| Bitrate Control | Multi Streaming CBR/VBR at H.264,H.265 (Controllable frame rate and Bandwidth) |
| Video Bitrate extra comment | Multi-rate for Preview and Recording |
| Audio Compression | G.711 ulaw |
| Special Feature | Dynamic ROI(Region of Interest) |

| I/O & Event | |
|---|---|
| Audio In / Out | Choose Mic or 1 Line Input[1.0Vrms, 3K ohm] / 1 Line Output |
| Alarm In / Out | 1 Line/1 Line |
| Mic | Yes |
| Event Trigger | Motion Alarm Network Disconnection Temperature Critical Illegal Login Schedule Sensor Detection |
| Event Notification | FTP E-Mail Alarm Out SD Card |

| Network | |
|---|---|
| Ethernet | RJ45(1000Base-T(1Gbps)) |
| Protocol | TCP/IP UDP AutoIP RTP(UDP/TCP) RTSP NTP HTTP HTTPS SSL DNS DDNS DHCP FTP SMTP ICMP SNMPv1/v2/v3(MIB-2) ONVIF |
| Security | HTTPS(SSL) IP filtering 802.1x |
| Application Programming I/F | CGI API ONVIF |
| Web viewer | MS Edge® Google Chrome® |
| Support languages | English Korean Japanese |
| Edge storage | Micro SD Micro SDHC Micro SDXC |
| SD Card Socket | 1 |

| Electrical | |
|---|---|
| Power Requirement | Adaptor is not included DC12V PoE IEEE 802.3af Class3 |
| Power consumption | DC Max: 13.1W PoE Max: 15.0W |

| Environmental | |
|---|---|
| Operating Temperature | -40℃ ~ 55℃ |
| Cold Start | -40℃ |

**CPRO**
**DIGITAL SURVEILLANCE SYSTEMS**

| Environmental | |
|---|---|
| Operating Humidity | 10-90% RH(Non-Condensing) |
| Vandal Proof Casing | IK10 |
| IP Rating | IP67 |
| Other Certification | FCC CE ROHS |

| Mechanical | |
|---|---|
| Housing Model | BT8 |
| Housing | Outdoor Bullet |
| Material | Aluminum-Die Casting |
| Color | White |
| Dimensions (W x D x H) | 289mm<br>147mm |
| Weight | 2.12kg |

## Compatible Accessories



BP01

Pole Mount Bracket



BCO01

Corner Mount Bracket