CPRO
DIGITAL SURVEILLANCE SYSTEMS

180° AI 4K IP IR Pano Bullet

NSF1-78-RS

Features

- 4K 180-degree AI Camera
- Supports Intelligent Video Analysis Events (Line/Intrusion/Queue..)
- 1/1.8" High-Sensitivity Sensor
- Maximum Resolution 3840 (Horizontal) X 2160 (Vertical) / 30fps
- Horizontal Field of View 180 degrees / 180-degree Fisheye Lens
- Day & Night (ICR) / IR Visible Distance 31 meters
- Backlight Compensation (WDR) / 3DNR
- SD/SDHC/SDXC Memory Slot
- PoE IEEE 802.3af/Class3
- IP67/IK10
- Built-in Heater



Dimension (mm)

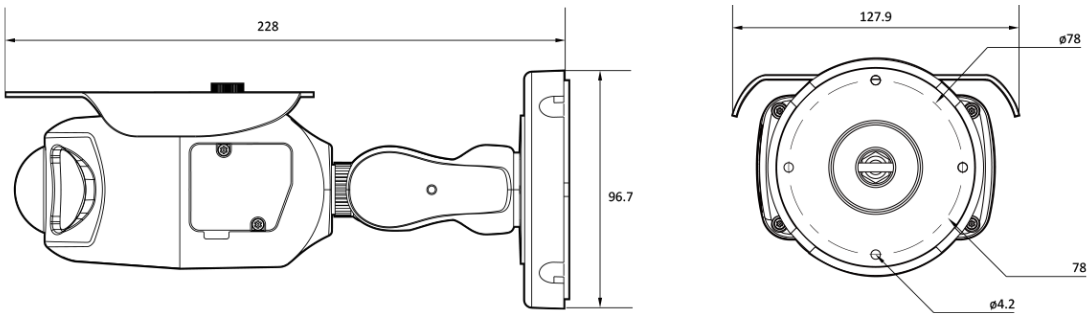

CPRO
DIGITAL SURVEILLANCE SYSTEMS

Specification

Video	
Image Sensor	1/1.8” 8.48M(STV2) CMOS
Channels	1
Total Pixel	3856(H) X 2200(V)
Max Resolution	3840(H) X 2160(V)
MIN. Illumination	COLOR: 0.15Lux BW: 0Lux with IR
Only installer Video Output	1 [CVBS 1.0V p-p (75Ω)]
S/N(signal/noise) Ratio	50dB
Scanning Mode	Progressive Scan

Lens	
Focal Length	2.3mm
Aperture	F2.8
Lens Type	Fixed
IRIS Type	Auto Exposure
Horizontal Angle	Over H:180° / V:90°
Pan / Tilt / Zoom	Zoom :Fixed

Operational	
Shutter Speed	Auto / Manual (1/15 ~ 1/32000) Anti-Flicker Slow Shutter(1/2,1/3,1/5,1/6,1/7.5, 1/10)
Auto Gain Control (AGC)	Auto
Day & Night	TDN (True Day & Night)
Digital Noise Reduction	3D DNR
Wide Dynamic Range (WDR)	WDR(2x)
Dynamic Range	120dB or above
LEDs	H4IR
LED Distance	100ft(31m)
Privacy Zone	No
Function	Motion-Detection LDC Mirror&Flip Auto White Balance

Intelligent Video Analytic	
AI Intelligent Video Analytic	Yes
Video analytics	Intrusion Detection Zones&lines Tamper Detection Appear Filter Disappear Filter Dwell Filter Enter Filter Exit Filter Stopped Filter Counting Counting Lines Object Color Direction Filter Logical Rules Tailgating Filter DL People Tracker DL Object Tracker Metadata

CPRO
DIGITAL SURVEILLANCE SYSTEMS

Encoder (video & audio)	
Video Compression	H.264 H.265 MJPEG
Support Resolution	H.265 : 3840x2160/2560x1440/1920x1080/1280x720/704x576/704x480/640x360/352x288/352x240 H.264 : 3840x2160/2560x1440/1920x1080/1280x720/704x576/704x480/640x360/352x288/352x240 MJPEG : 1920x1080/1280x720/768x432/704x576/704x480/640x360/352x288/352x240
Intelligent Codec	Yes
Multiple Profile Streaming Performance	Triple Streaming(3rd Only MJPEG)
Video BitRate	100Kbps~25Mbps
Bitrate Control	Multi Streaming CBR/VBR at H.264,H.265 (Controllable frame rate and Bandwidth)
Video Bitrate extra comment	Multi-rate for Preview and Recording
Audio Compression	G.711 ulaw
Special Feature	Dynamic ROI(Region of Interest)

I/O & Event	
Audio In / Out	1 Line Input[1.0Vrms, 3K ohm]/1 Line Output
Alarm In / Out	1 Line/1 Line
Mic	No
Event Trigger	Motion Alarm Network Disconnection Temperature Critical Illegal Login Schedule Sensor Detection
Event Notification	FTP E-Mail Alarm Out SD Card

Network	
Ethernet	RJ45(1000Base-T(1Gbps))
Protocol	TCP/IP UDP AutoIP RTP(UDP/TCP) RTSP NTP HTTP HTTPS SSL DNS DDNS DHCP FTP SMTP ICMP SNMPv1/v2/v3(MIB-2) ONVIF
Security	HTTPS(SSL) IP filtering 802.1x Digest Authentication
Application Programming I/F	CGI API ONVIF
Web viewer	MS Edge® Google Chrome®
Support languages	English Korean Japanese
Edge storage	Micro SD Micro SDHC Micro SDXC
SD Card Socket	1

Electrical	
Power Requirement	Adaptor is not included DC12V PoE IEEE 802.3af Class3
Power consumption	DC Max: 21.9W(12VDC 1.83A) PoE Max: 9.2W(48VDC 0.19A)

Environmental	
Operating Temperature	-20℃ ~ 50℃

CPRO
DIGITAL SURVEILLANCE SYSTEMS

Environmental	
Cold Start	-40℃(DC ONLY)
Operating Humidity	10-90% RH(Non-Condensing)
Vandal Proof Casing	IK10
IP Rating	IP67
Other Certification	FCC CE ROHS UL KC

Mechanical	
Housing Model	SF1
Housing	Outdoor Bullet Fisheye Specialty
Material	Aluminum-Die Casting
Color	White
Dimensions (W x D x H)	222.5mm 96.7mm
Weight	0.97kg

Compatible Accessories



BJC13
JUNCTION BRACKET



BJC11
JUNCTION BRACKET

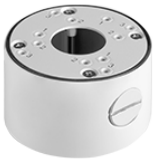

BJC07
Junction Bracket



BP01
Pole Mount Bracket



BCO01
Corner Mount Bracket