CPRO
DIGITAL SURVEILLANCE SYSTEMS

BC13 NPT



Dimension (mm)

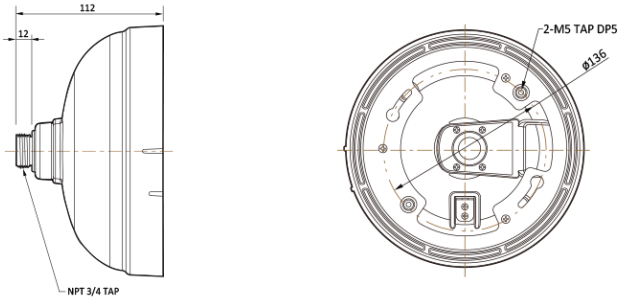

Specification

Mechanical	
Placement	Ceiling
Material	Aluminum-Die Casting
Color	White
Dimensions	W : 203.0mm H : 112.0mm
Weight	0.8kg

Compatible Accessories



BC13

Ceiling Bracket