CPRO
DIGITAL SURVEILLANCE SYSTEMS

Wall Bracket

BW09

Dimension (mm)

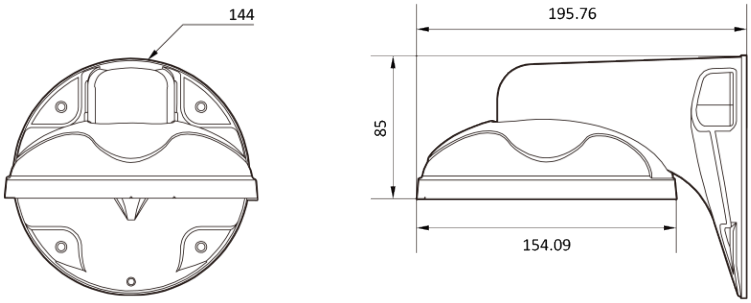

Specification

외관	
설치 위치	Wall
재질	Aluminum-Die Casting
색상	White
크기	W : 144mm H : 195.7mm

Compatible Accessories

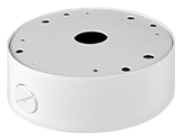

BJC09

Wall Junction Bracket

BP01

Pole Mount Bracket

BCO01

Corner Mount Bracket

Compatible Cameras

CVD5-28-RS

8M HD Analog IR Outdoor Dome

CVD5-25-R

5M HD Analog IR Outdoor Dome

CVD5-12-R

2M HD Analog IR Outdoor Dome