CPRO
DIGITAL SURVEILLANCE SYSTEMS

# Wall Bracket

BW09

## Dimension (mm)

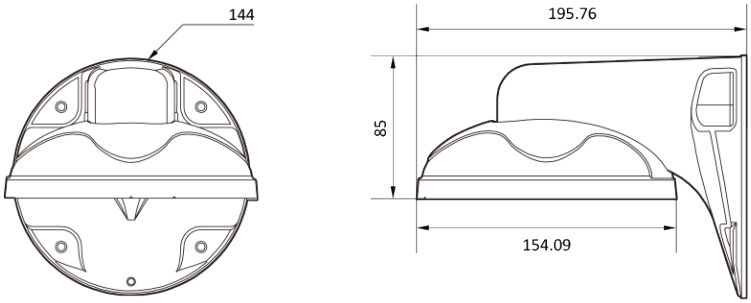


## Specification

| 외관 | |
|---|---|
| 설치 위치 | Wall |
| 재질 | Aluminum-Die Casting |
| 색상 | White |
| 크기 | W : 144mm<br>H : 195.7mm |

## Compatible Accessories

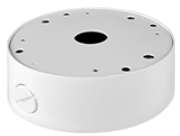

BJC09

Wall Junction Bracket

BP01

Pole Mount Bracket

BCO01

Corner Mount Bracket

## Compatible Cameras

CVD5-28-RS

8M HD Analog IR Outdoor Dome

CVD5-25-R

5M HD Analog IR Outdoor Dome

CVD5-12-R

2M HD Analog IR Outdoor Dome