CPRO
DIGITAL SURVEILLANCE SYSTEMS

BC20 NPT



Dimension (mm)

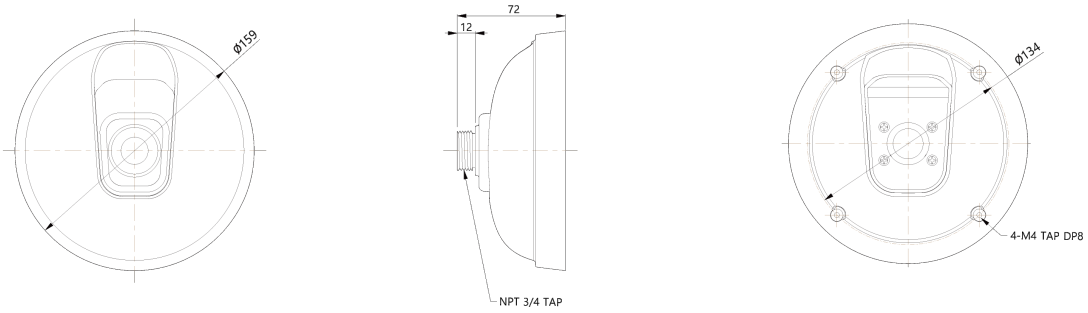

Specification

외관

Compatible Cameras

CPRO
DIGITAL SURVEILLANCE SYSTEMS



NVM20-710-R

AI Total 10M MFZ Dual IR Dome